Math 160 - Fall 2004
G. C. Neumann
11:30 MWF

Final Exam
December 17, 2004

Name: _____

PLEASE READ THIS PAGE!!!

1. **Hints:**
   - You might want to quickly look over all of the questions and start by working the questions that are easiest for you.
   - Check your answers only if you have time.
   - Many of the questions have multiple parts. Don't automatically give up on a question because you don't know how to do one part.
   - Consider showing your work, even when it's not requested. This could help you earn partial credit for an incorrect answer.
   - You don't get extra points for finishing early. If you have extra time, please consider checking your work over one more time before turning in your paper.
2. **Reminders:**
   - You may use a calculator, provided that your calculator cannot be used to communicate with others (for example, no cell phones are allowed).
   - You are allowed to use the sheet of notes that you prepared for use with this exam (both sides of one $8\frac{1}{2}'' \times 11''$ sheet of handwritten notes; no attachments). These notes must be turned in with your exam. No other type of written materials is allowed.
3. Read the following statement and sign your name:

   On my honor, as a student, I have neither given nor received unauthorized aid on this academic work.

   Signature: _____
4. Please make sure that your exam contains *ten pages*, including this one.

Question	Score	Possible	Question	Score	Possible
1		21	7		12
2		20	8		15
3		20	9		22
4		20	10		12
5		24	11		10
6		24			
			Total		200

1. (3 points each) Circle either "True" or "False" for each of the following. You might want to include a brief reason for your answer (which could earn you partial credit for an incorrect True / False answer).

   a) True False: If a critical voter in a blocking coalition defects, then the measure will pass in a weighted voting system.

   b) True False: The edges added in Eulerization of a street network graph indicate that new streets must be built.

   c) True False: A spanning tree is a connected graph that need not include every vertex in the original graph.

   d) True False: Sincere voters vote for their first choice in plurality voting, even when that candidate has no real chance to win.

   e) True False: Arrow's theorem tells us that if we don't live in a dictatorship, then all election outcomes will reflect society's wishes (in the sense that the Condorcet winner criterion, independence of irrelevant alternatives, monotonicity, and the Pareto condition are satisfied in every election with three or more alternatives).

   f) True False: Every complete graph contains a Hamiltonian circuit.

   g) True False: If the odds against winning are $7:3$, then the probability of winning is $\frac{3}{10}$.

2. (a) (10 points) Find an Euler circuit in the following graph. If you need to find an Eulerization first, do so and explain whether it is possible to find an Eulerization reusing fewer edges. Show your Euler circuit by numbering the edges (and adding arrows). Assume that all edges have the same cost.

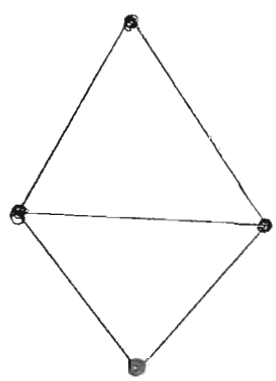

(b) (10 points) Find the critical path in the following order-requirement digraph. Show your work. What is the shortest amount of time in which this project can be completed after it starts? All times are given in hours.

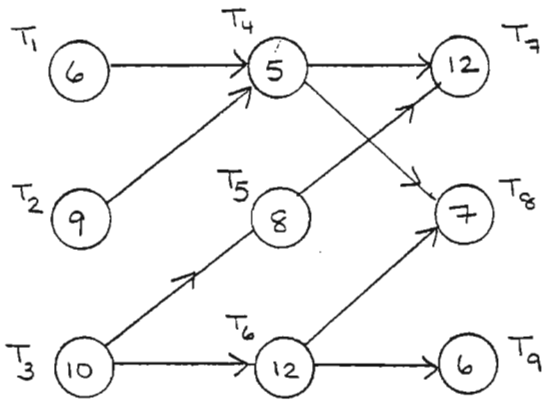

3. (a) (10 points) A sandwich shop offers 3 soups, 15 sandwiches, and 6 desserts. How many different meals can a customer order, assuming that the customer orders one bowl of soup, one sandwich, and one dessert? Show your work.

(b) (10 points) How many different eight-digit numbers are there that have five 2's, three 7's, and no other digits? Show your work.

4. Consider the following heights (in inches):

$$72, 68, 62, 75, 62, 64, 78, 58, 67, 64, 60, 65$$

(a) (10 points) Summarize this data using a histogram, grouping heights by 5 inches. Show your work.

(b) (10 points) Give a five-number summary of this data. This should be done by hand (rather than having your calculator do it for you). Show your work.

5. Suppose that you just rolled three dice. Each die has six sides and each side is equally likely to be rolled.

   (a) (6 points) What is the probability that all three dice will be "1"s?

   (b) (6 points) What is the probability that all three of the dice match (*i.e.*,three of a kind)?

   (c) (6 points) What is the probability that at most two of the dice match? Show your work. (*Hint:* Can you relate this to the previous question?)

   (d) (6 points) Suppose that a casino pays \$70 if a guest rolls three of a kind after betting \$2 on this outcome. How much money can the casino expect to make per bet of this type over a period of several years, assuming that hundreds of guests make this bet each day? Show your work. (*Hint::* Will calculating the mean of a probability model help here?)

6. Consider the following set of preference lists for a four candidate, 16 voter election:

	Number of voters (16)			
Rank	5	5	4	2
First	A	B	C	B
Second	B	D	A	D
Third	C	A	B	A
Fourth	D	C	D	C

Show your work.

(a) (8 points) Does this election have a Condorcet winner?

(b) (8 points) Does the Borda count satisfy the Condorcet winner criterion in this election?

(c) (8 points) Suppose that a voter approves of all candidates that are ranked first, second, or third on that voter's preference list. Identify the winner(s) of this election under approval voting.

7. (12 points) Consider the weighted voting system [q: w(A), w(B), w(C)] = [12: 6, 6, 5]. Is power shared equally? Explain. (*Hint*: You do not need to calculate Banzhaf or Shapley-Shubik power indices to answer this question.)

8. Suppose that the number of hours that a 25W light bulb will burn continuously is distributed normally with a mean of 2500 hours and a standard deviation of 500 hours.

   (a) (5 points) Draw a graph of the distribution of this data. Indicate μ, $\mu - \sigma$, and $\mu + \sigma$ on this graph.

   (b) (5 points) What is the probability that a 25W light bulb will burn continuously for at least 1000 hours and no more than 4000 hours?

   (c) (5 points) What is the probability that a 25W light bulb will burn continuously for less than 3500 hours? Show your work.

9. Suppose that you are planning a business trip, starting and ending at Kansas City International Airport. You need to spend one day in Los Angeles, one day in Phoenix, and one day in San Francisco. You want to minimize your travel costs. Your time is also valuable, so you are not going to visit a city more than once during this trip.

The following table lists travel costs between pairs of cities. The costs are the same in both directions; for example, the cost of going from Kansas City to Los Angeles is the same as the cost of going from Los Angeles to Kansas City.

	Cities	Cost ($)
Kansas City	Los Angeles	300
Kansas City	Phoenix	150
Kansas City	San Francisco	250
Los Angeles	Phoenix	100
Los Angeles	San Francisco	80
Phoenix	San Francisco	100

(a) (10 points) Summarize this information on a graph.

(b) (10 points) Suggest a minimum cost itinerary below. Show your work. (If you are doing your work on the graph in (a), state which algorithm you are using and indicate a starting point.)

(c) (2 points) Could another itinerary satisfying your requirements have a lower cost? Explain without doing any more calculations.

10. Timmy found a quarter on the sidewalk. This quarter has seen better days and the heads side looked worn down. Timmy wondered whether he could use this coin to advantage when he and his little sister argue about what they are going to watch on TV at their grandmother's house (their grandmother usually has them toss a coin to settle such disagreements). Timmy decided to conduct an experiment when his little sister was playing outside. Over the course of a few weeks, he tossed this coin 2400 times. It came up heads 1161 times.

    (a) (8 points) Summarize Timmy's results, including a confidence interval. Show your work.

    (b) (4 points) Do you think that this is a fair coin? Explain.

11. (10 points) Suppose that you are studying the attitudes of middle-school students towards plagiarism. Because this is a sensitive topic, you ask each student to toss a coin before answering your question. If the coin comes up heads, your question is answered truthfully. If the coin comes up tails, the student answers "Yes" (no matter what the true answer really is for that student). The students do not tell you whether their coins came up heads or tails. Assume that each student is tossing a fair coin and is following your instructions. You contact a simple random sample of 1600 middle-school students in the U.S. and ask each student

"Have you ever included a paragraph or more of material from the Internet in an essay as if it were your own work?"

Suppose that 912 of the students answered "Yes." From these results, estimate the percentage of middle school students nationwide who have plagiarized material from the Internet. Show your work. Do not calculate a confidence level.