Name _____ Rec. Instr. _____

Rec. Time _____

PLANE TRIGONOMETRY

Exam II
March 9, 2006

Page 1 (10 pts.)	**Page 2** (30 pts.)	**Page 3** (30 pts.)	**Page 4** (30 pts.)	**TOTAL** (100 pts.)

Below you will find 10 problems, each worth 10 points. Solve the problems in the space provided. When writing a solution to a problem, **show all work**. No books or notes are allowed. **Sign and submit your formula sheet with the exam.**

Problem 1. From a point that is 100 feet above ground level, the angle of elevation of the top of a building is 50°, and the angle of depression of the base of the building is 40°. Find the height of the building. (Round to the nearest foot.)

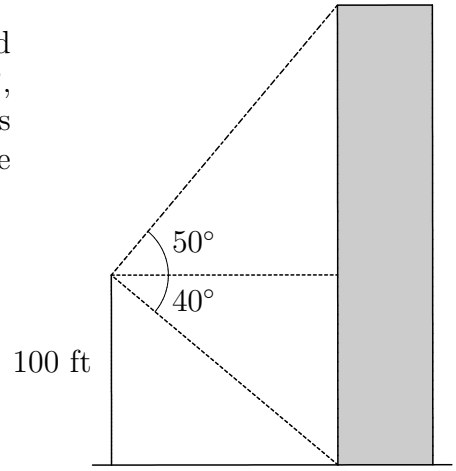

Problem 2. The graph of the equation $y = a\sin(bx + c)$, with $a > 0$ and $b > 0$, is shown in the figure below.

(a) Find the amplitude and the period.

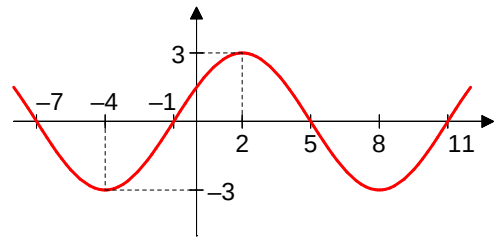

(b) Find the coefficients a, b and c.

Problem 3. Find the amplitude and the period for the curve $y = -2\sin\left(4x + \frac{\pi}{3}\right)$.

Problem 4. Given two angles α and β in the second quadrant, with $\sin\alpha = \frac{3}{5}$, and $\cos\beta = -\frac{5}{13}$, find the exact values of $\sin(\alpha + \beta)$ and $\cos(\alpha + \beta)$.

Problem 5. Find **all** solutions of the equation: $\cos\left(2x - \frac{\pi}{3}\right) = \frac{1}{2}$. Use **exact** values.

Problem 6. Find the **exact** values of $\sin\left(-\frac{25\pi}{6}\right)$ and $\cos\left(-\frac{25\pi}{6}\right)$.

Problem 7. Verify the identity: $\dfrac{\sin\theta}{\csc\theta - \cot\theta} = 1 + \cos\theta$.

Problem 8. Given $180° < \theta < 360°$, and $\cos\theta = \dfrac{1}{8}$, find the **exact values** of $\sin(\theta/2)$ and $\cos(\theta/2)$.

Problem 9. Given $\triangle ABC$, with $\hat{C} = 90°$, $a = 3$ cm, and $b = 5$ cm, find the angles $\hat{A}$, $\hat{B}$, and side c. Express all angles in degrees. Round all answers to the nearest tenth.

Problem 10. Find the solutions of the equation $\cos 2x + \cos x + 1 = 0$, that are in the interval $[0, 2\pi)$. Use **exact** values.